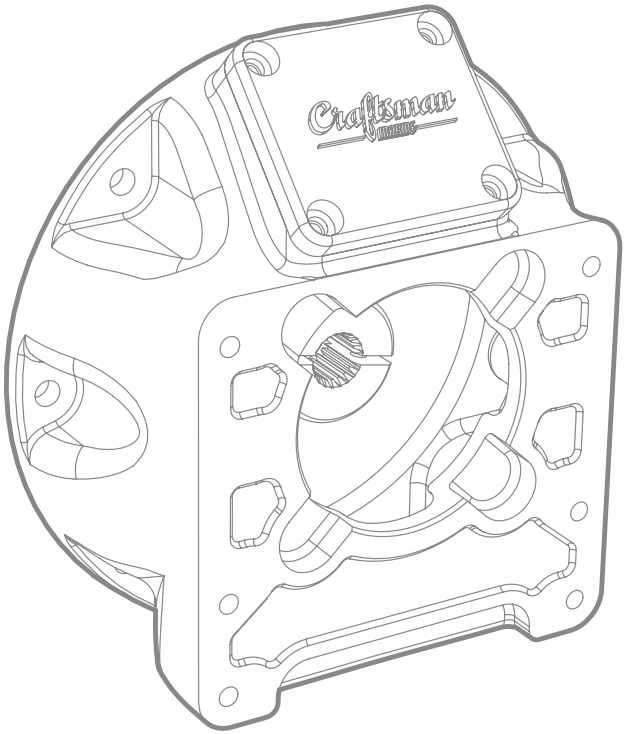

SAILDRIVE ADAPTOR

MANUAL FOR CM2.16 / CM3.27 / CM4.42

VOLVO PENTA SAILDRIVES 110S, 120S, 120SB

CRAFTED WITH CRAFTSMAN MARINE

PROPULSION

Volvo Penta Saildrive adaptor

Craftsman Marine has developed adaptors to enable you to replace your old Volvo Penta engine by a Craftsman Marine engine. Check below if you have acquired the correct kit for your saildrive:

AJ.020.20000	Volvo Penta 110S saildrive
AJ.020.20010	Volvo Penta 120S saildrive
AJ.020.20020	Volvo Penta 120SB saildrive

The adaptors will fit the following engines: CM2.16, CM3.27 and CM4.42.

Installation instructions

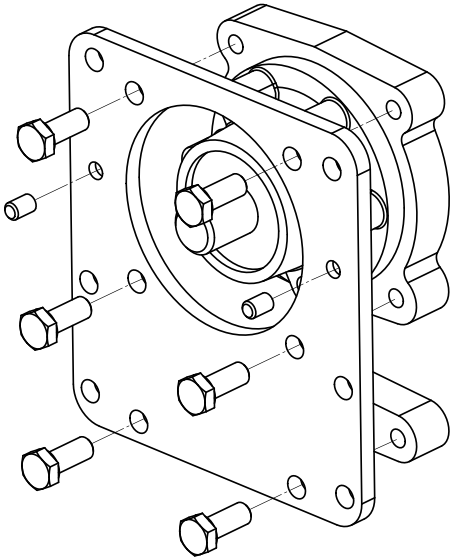

1. Disassemble the old engine from the saildrive. Check the VP installation instructions for details and correct supporting of the S-drive. Check the S-drive for excessive wear and/or wear to the splines.

2. Only for 120S saildrive: mount the adaptor plate with the 6 supplied bolts and place the locating pins in the plate.

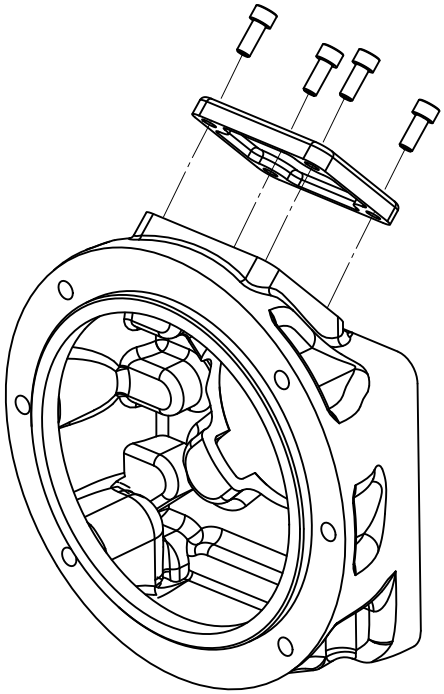

3. Remove the 4 Allen bolts and cover from the saildrive adaptor housing.

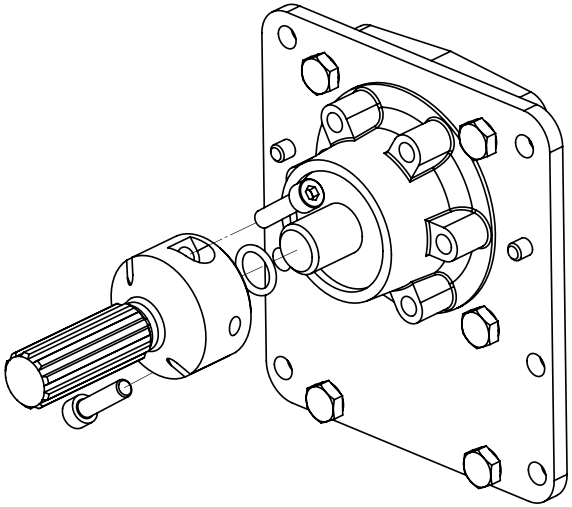

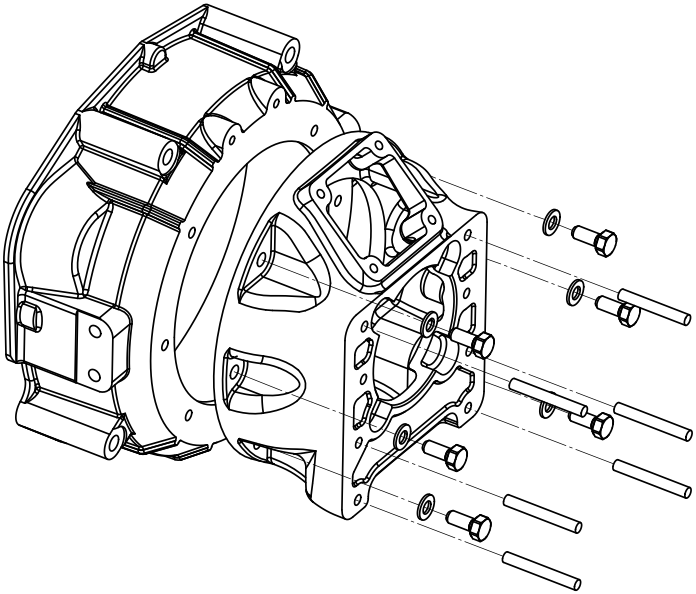

4. Fit the two M8 Allen bolts and place the O-ring in the hole of the spline adaptor Slide the adaptor on the S-drive and tighten the bolts finger tight.

5. Apply grease to the outer splines (like Molykote BR2 Plus).

6. Fit the 6 studs in the adaptor housing and mount the S-drive adaptor on the engine with the M10 bolts and washers.

Installation instructions

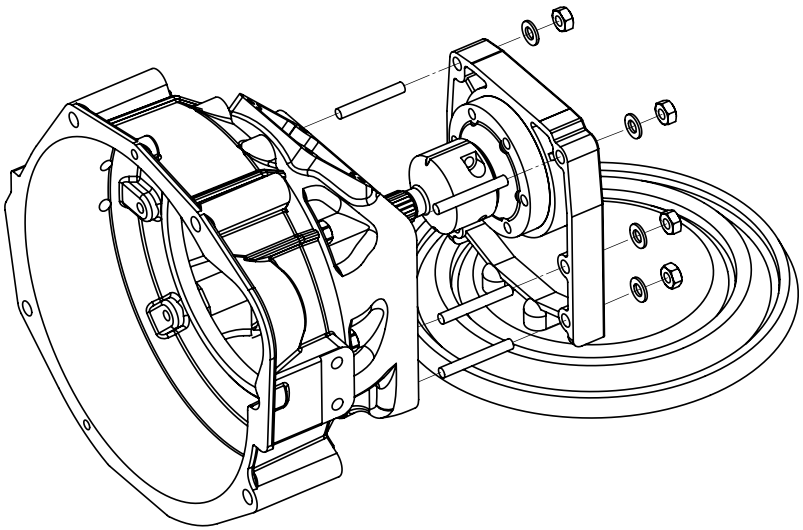

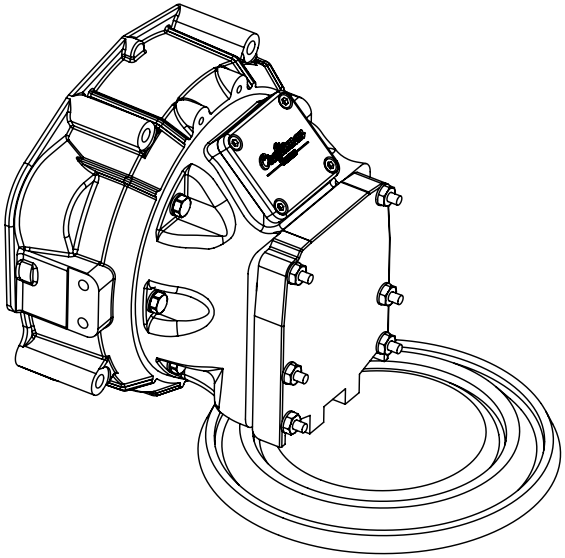

7. Make sure the S-drive is shifted in neutral and slide the engine over the S-drive. Rotate the spline adaptor through the opening of the S-drive adaptor to align the spline with the drive plate. Check if the S-drive adaptor is flush with the S-drive before evenly tightening the nuts.

8. Remove the two Allen bolts from the spline adaptor and apply loctite to the threads. The engine can be turned by hand to reach the bolts. Re-insert the bolts and tighten alternately and evenly. Keep turning the engine 180° when doing this several times.

9. Mount the cover removed in step 3.

info@craftsmanmarine.com
www.craftsmanmarine.com

ZD-010.021.2.1.03.13

CRAFTED WITH CRAFTSMAN MARINE