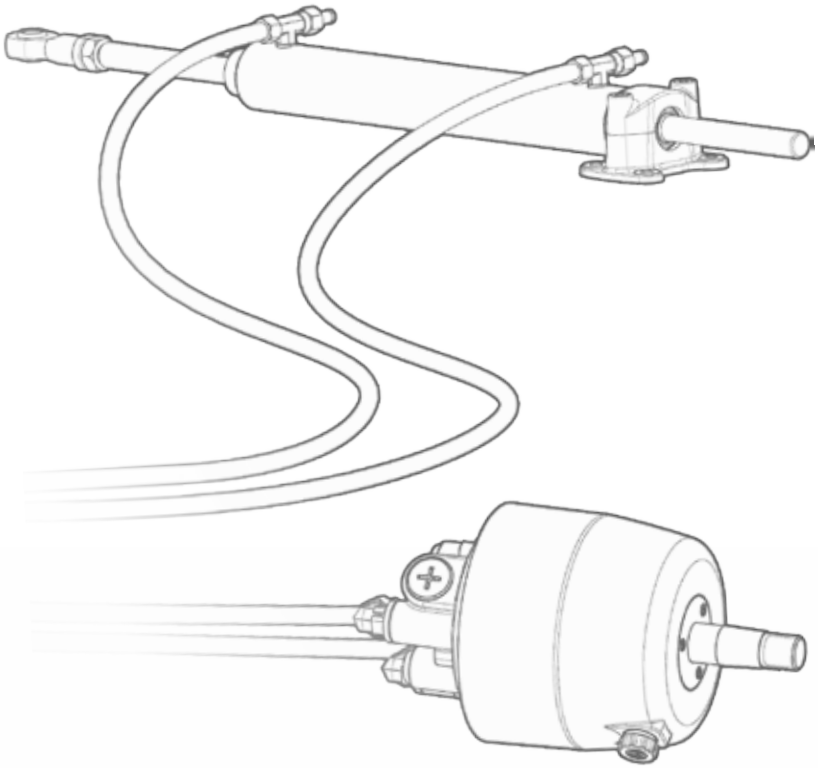

HYDRAULIC STEERING

INSTALLATION MANUAL

CRAFTED WITH CRAFTSMAN MARINE

MANOEUVRING

Disclaimer

The specifications and the descriptions in this instruction manual were correct at the time of going to press. However, Craftsman Marine is continuously striving after the improvement of its products and therefore reserves the right to modify – at all times and without prior notification - product specifications and instruction manuals.

Table of contents

Safety 2

Table of contents 3

General safety guidelines 4

General warranty conditions 5

Installation scheme 6
- Single steering station scheme 6
- Multiple steering station scheme 6

Steering helm installation and dimensions 7
- Middle dashboard mount helm 8
- Rear mount helm 9

Cylinder installation 10
- Balanced inboard cylinder 10

Hose installation 12

Connecting hose to cylinders 12

Connecting hose to steering helm 13

System filling and purging 14

Single steering station and cylinder scheme 15

Multiple steering station and cylinder scheme 16

Summarized alert instructions and maintenance 17

Technical information 18

Troubleshooting guide 19

General safety guidelines

Read carefully and follow safety guidelines as provided below.

Craftsman Marine shall not be held liable for property damage or personal injury due to modified, improperly used or incorrectly installed products. Craftsman Marine reserves the right as it may deem necessary, at any time to modify it's products to improve their performance.

Storage:

- Store products at temperatures of between -40°C (-14°F) and +85°C (+211°F).
- Only handle with appropriate means or machinery to prevent system failures.
- Periodically check stored product conditions to prevent deterioration.

Installation:

- Check package integrity; damage may occur during transportation that may cause system failures.
- Steering system installation must be **EXCLUSIVELY** by professional marine technicians following careful reading of this instructions manual.
- System failures must be immediately reported to professional marine technicians as originally responsible for installation.
- Immediately stop the system in the event of a breakdown. Do not restart system **until** cause of malfunction has been eliminated and restarting has been authorized by professional marine technicians.
- To tamper with, disable or remove safety systems constitutes criminal offense.
- Craftsman Marine shall not be held liable for modifications of its products by any third parties; this causes immediate cancellation of warranty.
- Components may only be replaced with original Craftsman Marine parts. Failure to comply causes immediate cancellation of warranty.
- Responsibility for updating the system to post installation servicing rests with system owner.
- Responsibility rests with buyer to assess conformity with applicable regulations of used steering system.
- Keep instruction manual for future reference: ask for replacement copy in the event this may deteriorate or get lost.

We recommend that you dispose of hazardous waste (oils, solvents, grease) consistent with applicable legislation.

General warranty conditions

Craftsman Marine warrants that its products are state-of-the-art construction, free from defects in workmanship and materials. In the event of malfunction that may occur in Craftsman Marine system within twenty four months of the date of manufacture, Craftsman Marine provides repair or replacement, at Craftsman Marine's sole option, free of charge. This warranty does not apply in the event of damage resulting from accidental breakage, incorrect installation or negligent or improper use. This warranty does not cover costs in connection with the assembly or disassembly of products, product transportation and technical support, even if attributable to manufacturing defects.

Craftsman Marine system components CE are marked under applicable Directive 94/25/EC and ISO 10595 regulations. It is a legal requirement that CE on marked craft steering systems are installed whose components are also CE marked.

Craftsman Marine has no obligation under this warranty for any product used in a steering system installation with other non equally certified products.

JURISDICTION

Any litigation will be settled by the court of The Netherlands.

Installation scheme

Single steering station diagram

> **CAUTION:**
> For inboard steering cylinder installations using Ø 12 mm [5/16"] nylon tubing, use Craftsman Marine **flexible hose** kit to connect cylinder end of hydraulic hose.

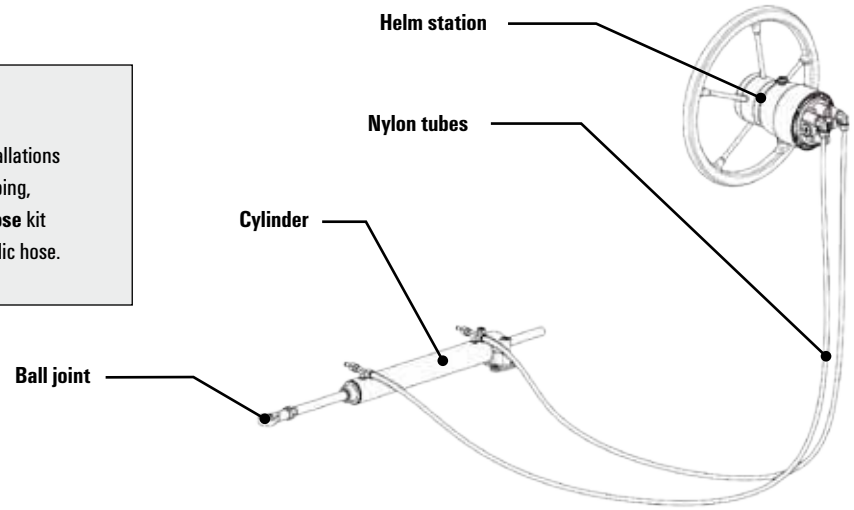

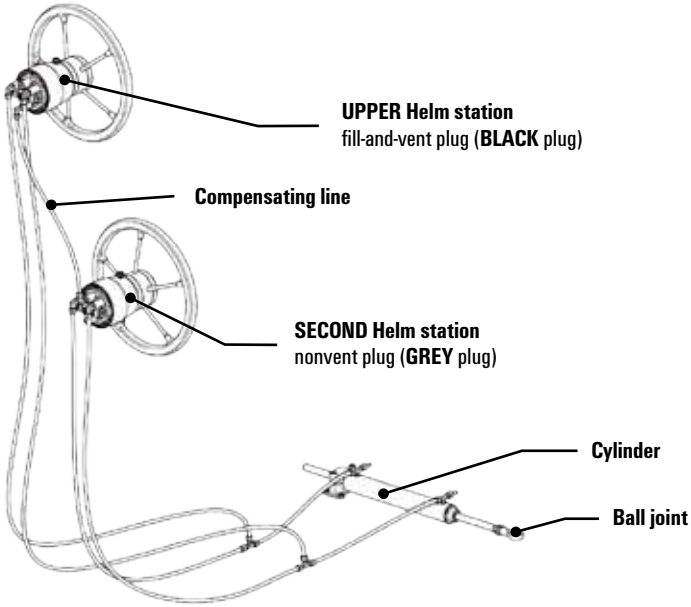

Multiple steering station diagram

> **CAUTION:**
> Ensure GREY nonvent plug is in use, to avoid oil leaks and subsequent system malfunction.

Installation of Craftsman Marine steering helm can be both with horizontal and vertical shaft or any intermediate inclined position.

We recommend that you follow instructions as below for correct steering system installation onto console or dashboard:

- Ensure that the filler plug is always in **UPWARD** position to avoid oil leaks
- Mount helm to dash as required for your model application (use appropriate drilling template)
- Read instruction manual carefully
- Only utilize Craftsman Marine branded parts

NOTICE:
Only utilize **self-locking** fasteners as included in package to install steering system onto console and prevent system malfunction.

Only utilize sealants Loctite 542 or Loctite 545 to fasten conical fittings properly. Do not use teflon or tape sealers that may cause steering system to malfunction. Also ensure that liquid sealant does not enter the system.

- Insert fittings manually and screw until tight
- Use wrench/spanner to turn additional 1 ½ to 2 ½ turns, depending on desired hose installation.

DO NOT EXCEED 17.6 Nm

Steering helms dimensions and technical features

Middle dashboard installation

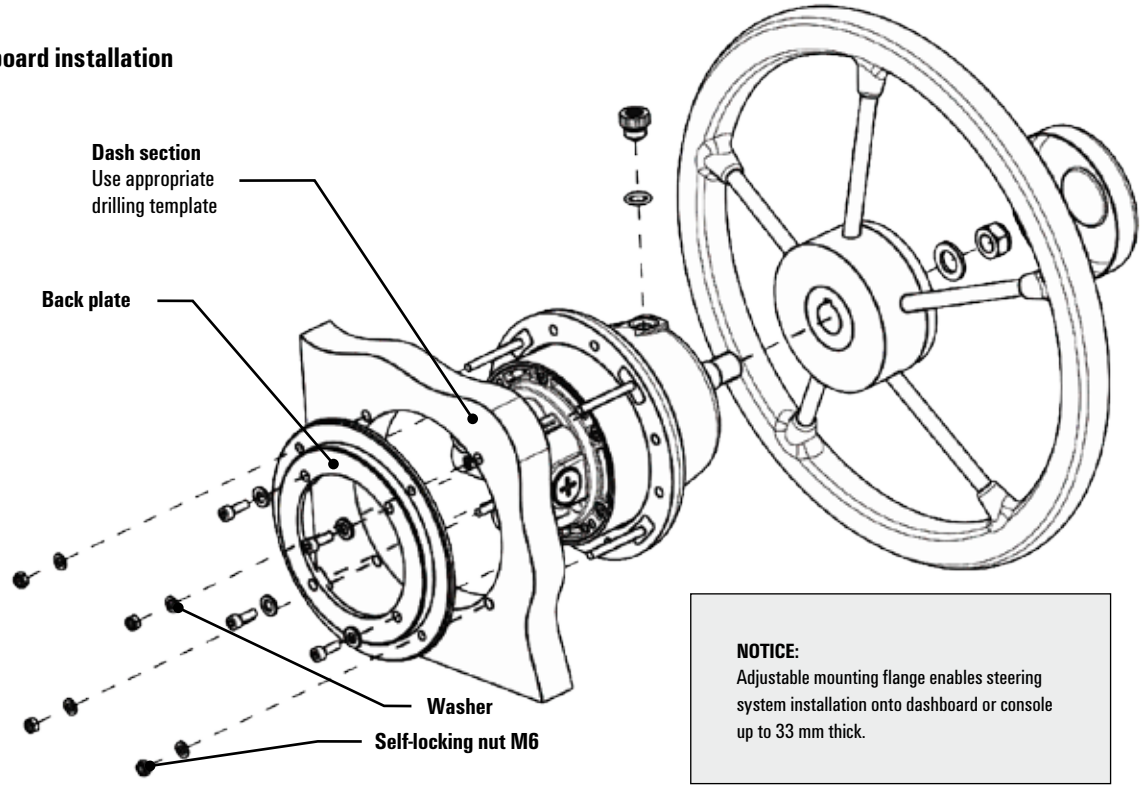

NOTICE:
Adjustable mounting flange enables steering system installation onto dashboard or console up to 33 mm thick.

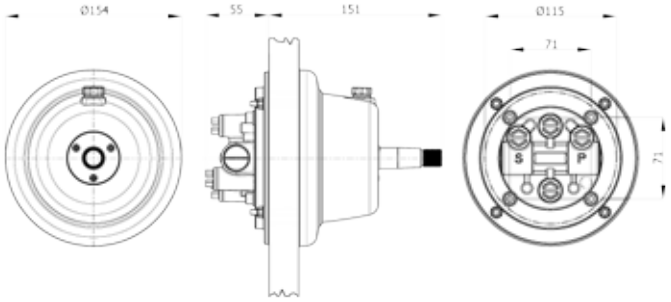

Rear mount helm

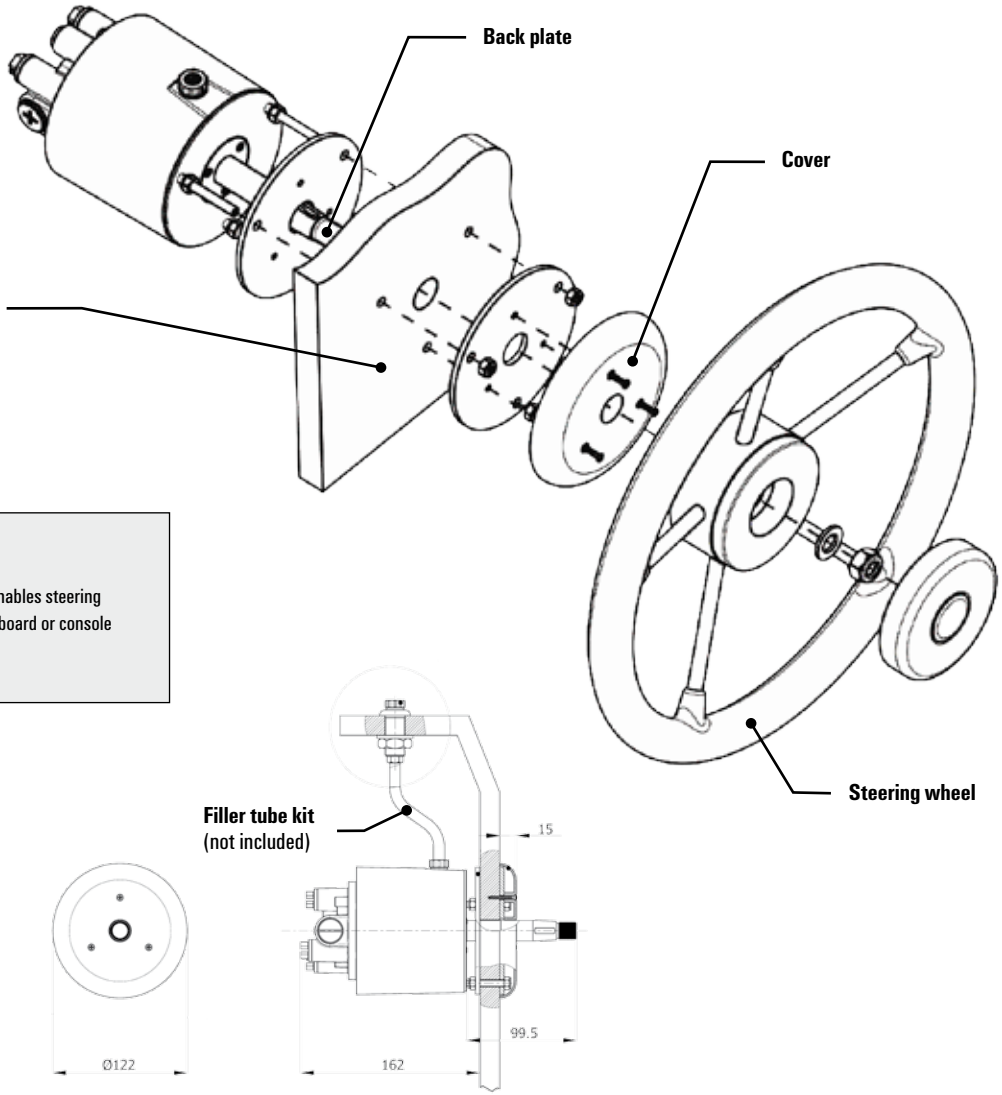

NOTICE:
Adjustable mounting flange enables steering system installation onto dashboard or console up to 33 mm thick.

Cylinder installation

To ensure successful cylinder operation and longer durability of seals and other parts subject to wear, it is necessary to use special care in installation.

Correct installation is illustrated in the diagram as follows below:

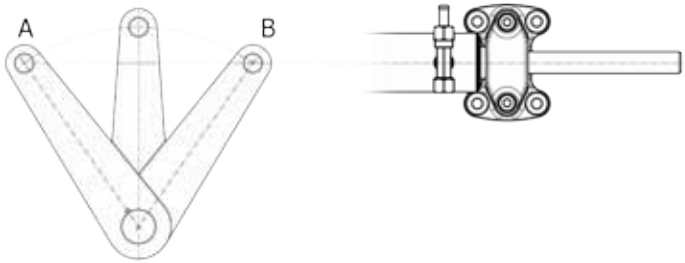

Letters A and B represent tiller arm hard-over positions.
Align AB line to cylinder centerline.

Balanced inboard cylinders

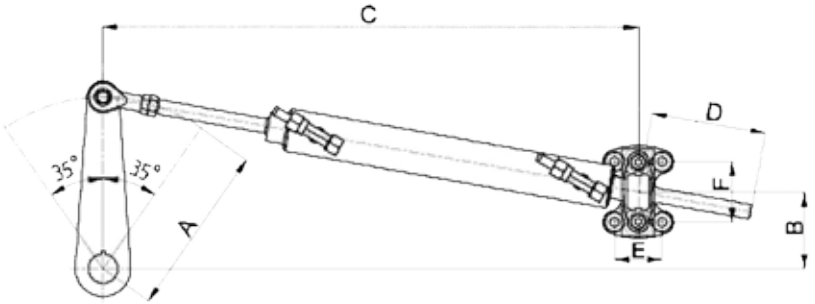

Cyllinder Model	Stroke		A		B		C		D		E		F	
	mm	inch	mm	inch	mm	inch	mm	inch	mm	inch	mm	inch	mm	inch
BL.010.20025	150	5.9	131	5.1	107	4.2	458	18.0	96.5	3.8	44	1.7	56	2.2
BL.010.20032	178	7	155	6.1	127	5	499	19.6	109.5	4.3	44	1.7	56	2.2
BL.010.20038	178	7	155	6.1	127	5	504	19.8	112	4.4	44	1.7	66	2.6
BL.010.20040	228	9	199	7.8	163	6.4	590	23.2	140.5	5.5	44	1.7	66	2.6

Installation

1. Align rudder to boat centerline
2. Loosen tube fittings
3. Locate cylinder onto craft based on dimensions “B”, “C” and “D” as configured above.
4. Ensure support bracket is mounted onto cylinder by four through screws and four self locking nuts (not included); only utilize stainless steel nuts and screws.
5. Check piston movement by turning helm to hard-over in both directions. Piston centerline must be horizontal at both hard-over positions.

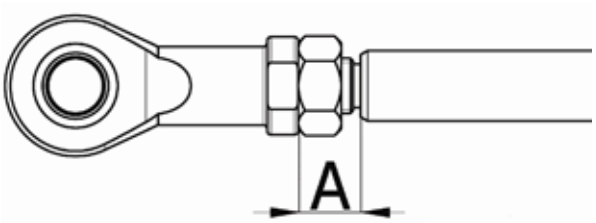

Dimension ‘A’ must **never** be in excess of 18 mm.

NOTICE:
C and D dimensions are calculated based on central ball joint relative to its regulation zone. Ball joint position can be adjusted up to three mm per side to correct any alignment errors.

- Mounting cylinder onto craft must preferably be by through bolts than lag screws.
- Tube fittings must be in upward position. If not possible, the cylinder should be installed only **AFTER** filling and purging of the steering system has been performed as follows below.
- Adequately protect cylinder rod from accidental collision that may cause steering malfunction
- Corrosion may occur if cylinder utilization is in highly corrosive environments. Check for corrosion and replace corroded parts.

Hose installation

Use **flexible Craftsman Marine hose** or copper tubes to connect steering helm and cylinder and twin steering station installations.

NOTICE:
To minimize pressure loss use shortest path to route hoses without exceeding a **minimum bend radius of 40 mm**.

Follow instructions below to ensure correct hose installation:

- Install hoses at safety distance from heat sources or chemical agents.
- Route hoses with a minimal rise to facilitate air removal in filling phase.
- Check hose integrity. Use pvc piping or grommets to protect hoses if necessary. Avoid denting and bending of hoses that may reduce hose section.
- Ensure cleanest possible installation environment to avoid system contamination.

NOTICE:
Only remove protective fitting caps upon installation.

- Check that hose ends are cut clean (unless hoses with preassembled hose end fittings are in use);

We recommend that you only utilize cutters, cutting nippers or copper tube cutters as appropriate to shorten hose length, if necessary. Do not use saw edged blade.

- Strap down hose at regular intervals, using NONMETALLIC ties

Connecting hose to cylinders

Craftsman Marine hydraulic cylinders are supplied with ¼'' NPT fittings. Utilize flexible hose (5/16") or copper hose with 10mm outer diameter or specific preinstalled end fittings hose.

Hydraulic systems create a lot of pressure in the hoses and fittings moving hydraulic fluid through the system. The weak spot in the system rests in improperly installed fittings. Crimped fitting support the pressure created by the hydraulic fluid but once they are installed, they cannot be reused. Reusable hydraulic fitting secure to the end of a hydraulic line and will not break under pressure when properly installed.

Follow the steps described below to fit the re-useable hose fittings to the flexible hydraulic hose.

Things you need:

- Reusable hydraulic hose fitting
- Bench vice
- Hydraulic hose
- Hydraulic fluid
- Two adjustable wrenches

1. Clamp a reusable hose fitting socket into the jaws of a bench vice.
2. Insert one end of a hydraulic hose into the fitting secured in the vice. Turn the hose counterclockwise to thread it into the socket. Continue turning until the hose bottoms out in the fitting.
3. Lubricate the mandrel assemble of the reusable hydraulic fitting with clean hydraulic fluid. Slide the mandrel in and out of the socket and into the end of the hydraulic hose to lubricate the inside of the connection.

4. Push the mandrel into the socket until the threads of the assembly meet the front edge of the socket. Turn the nipple nut clockwise to thread the mandrel into the socket with an adjustable wrench. Stop turning the nut when there is a 1/32 to 1/16 inch gap between the front edge of the mandrel assembly and the front face of the socket.
5. Hold the front nipple nut steady with an adjustable wrench. Turn the rear mandrel nut counterclockwise with a second adjustable wrench to complete the assembly.

Reverse the listed steps to disassemble a reusable hydraulic fitting.

Connecting hose to steering helm

Remove letter **A** yellow caps in side figure 1 to connect steering helm to hydraulic piston.

ONLY remove letter B black caps in figure 1 to connect steering helm station to second helm station. Utilize sealant Loctite 542 or equivalent to secure tightened fittings.

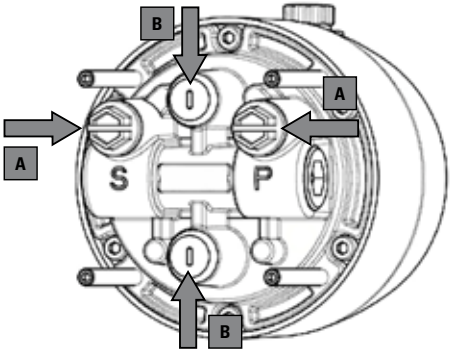

CAUTION:
Only utilize liquid sealants Loctite or equivalent to secure tightened fittings. Do not use tape or teflon sealers that may cause steering malfunction or permanently damaged steering. Also prevent liquid sealant contaminating the system.

Connecting copper hose to cylinder (no preassembled hose end fittings)

1. Unscrew bolted fitting on cylinder and remove protective cap.
2. Slide nut over hose and insert hose into fitting to bottom.
3. Thread nut tight using wrench (not included).

Connecting hose to cylinder (preassembled hose end fittings)

1. Unscrew bolted fitting on cylinder and remove protective cap.
2. Remove protective cap from hose fitting.
3. Slide nut over hose end fitting and hose end fitting into cylinder fitting to bottom.
4. Thread nut tight using wrench (not included).

System filling and purging

Only utilize hydraulic oil for Craftsman Marine steering system

Notice: Filling the system starts at helm station.

Perform instructions on all helm pumps except uppermost on multiple steering station systems in the first place. Once filling procedures are completed for stations at lower level, replace black vent plug with grey nonvent plug. Perform this latter procedure on all helm pumps except uppermost helm pump.
Continue to upper steering helm.

- Replace helm filler plug with helm fill port
- Screw threaded end of filler tube into helm filler port.
- Replace white oil bottle cap with specific (white) cap for connection to filler tube.
- Connect filler tube to specific connecting cap.
- Hold bottle upright and pierce bottle bottom (use push pin as included in filling kit).

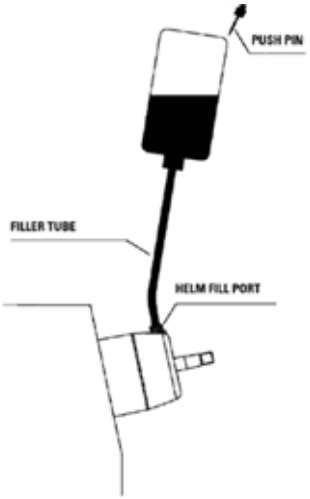

Connection to fixed cylinder rod

Connect oil bottle as earlier described. Fill helm pump with hydraulic oil.
Oil must be visible in filler tube. Allow no air into the system. Filler tube must always be full during filling procedures. Use additional fluid bottle if necessary.

CAUTION:
Steering wheel rotation during filling procedures must be SLOW. In the event that excess fastness may cause air bubbles in oil, we recommend you to wait no less than 24 hours before continuing to next steps.

- Replace helm filler plug with helm fill port
- Screw threaded end of filler tube into helm filler port.
- Replace white oil bottle cap with specific (white) cap for connection to filler tube.
- Connect filler tube to specific connecting cap.
- Hold bottle upright and pierce bottle bottom (use push pin as included in filling kit).

Refer to diagram 1

1. Open right bleeder on cylinder body (fig.2) and turn steering wheel as illustrated until air is completely eliminated: oil ONLY should come out of the bleeder.
2. Close bleeder and continue SAME steering wheel rotation until steering wheel comes to halt
3. Open the other bleeder (fig.4) and turn steering wheel in opposite direction until air is completely eliminated.
4. Close bleeder and continue same steering wheel rotation until steering wheel comes to halt.
5. Reiterate procedure until complete air elimination.

CAUTION:

Check proper steering system installation after each procedure. Turn steering wheel until fully stroked in both directions.

Diagram 1 Oil steering wheel connection to engine

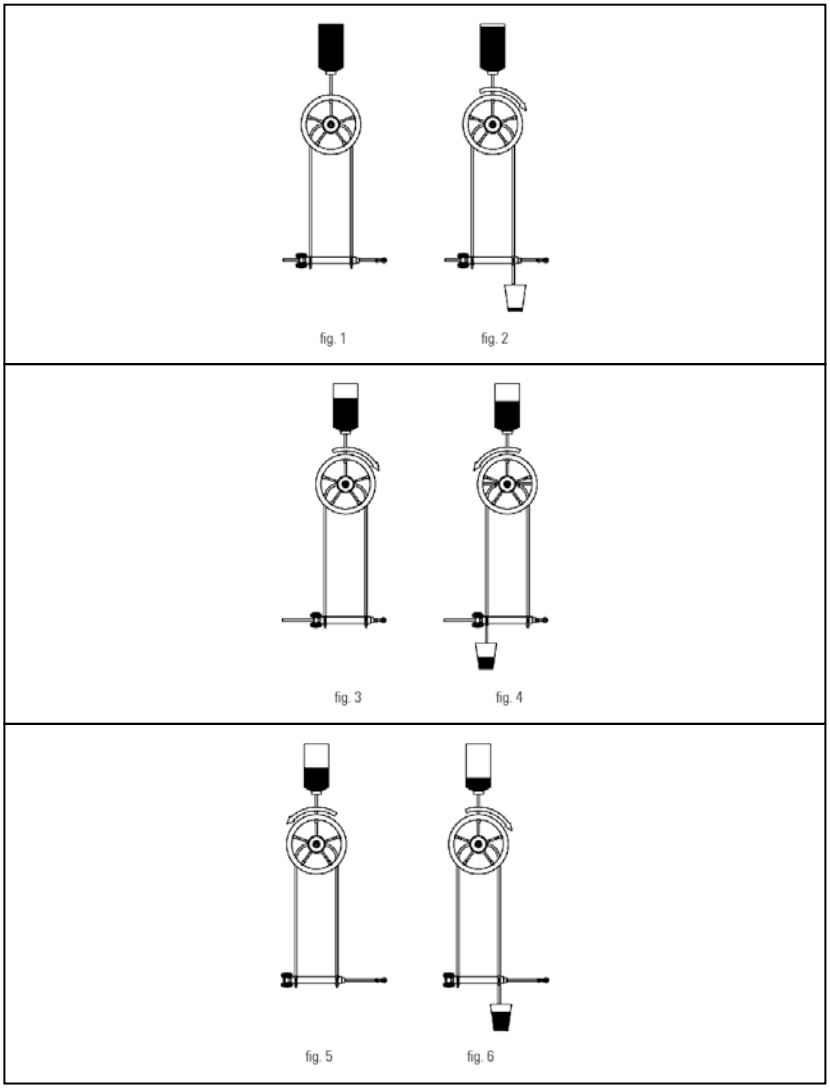

Multiple steering station system

IMPORTANT: In all multiple station system installations, replace BLACK vent plug with GREY nonvent plug on all helm pumps other than uppermost.

Connection to fixed cylinder rod

Single station multiple cylinders

Perform installation as shown in fig. 7

Perform steps as in diagram 1, on one cylinder first and then on the other, until system is full

Multiple stations multiple cylinders

Perform connection as shown in fig. 8

Perform steps as in diagram 1, on one cylinder first and then on the other. Turn steering wheel at helms other than upper station first. Last turn steering wheel at upper helm station, until system is full.

Multiple stations one cylinder

Perform connection as shown in fig.9

Perform steps as in diagram 1. Turn steering wheel at helms other than upper station first. Last turn steering wheel at upper helm station, until system is full.

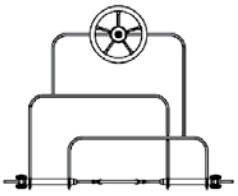

fig. 7

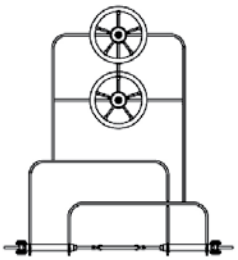

fig. 8

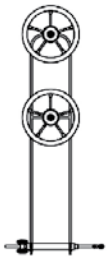

fig. 9

Perform system check after filling and purging procedures are completed, as follows: turn steering wheel from hard over to hard over in both directions. Perform this procedure on all helm stations. Ensure correct system installation. Ensure no system malfunction prior to operating your boat.

CAUTION:
Prior to installation, we recommend that you remove rings, necklaces, watches and any other accessories that might get caught in mobile parts of the system.

Hose/pipe/fitting sealant:
Only utilize liquid sealants Loctite or equivalent. Prevent liquid sealant contaminating the system that may cause steering malfunction or permanently damaged steering.

Protect steering system from contaminants:
Prevent contaminants from entering the system that may cause malfunction or permanently damaged steering. Ensure cleanest possible installation environment.

Filling and purging the system:
Steering wheel rotation during filling procedures must be SLOW. In the event that excess fastness may cause air bubbles in oil, we recommend that you wait no less than 24 hours prior to continuing onto next steps.

MAINTENANCE:
Utilize Craftsman Marine hydraulic fluid or equivalent. NEVER utilize brake fluid. System maintenance requirements will vary depending on operational and weather conditions. Professional marine mechanics inspection is a requirement on a biannual basis. Periodically check piston and helm fittings for oil leaks. Semiannually check bolt connections, hoses and general system wear.

Oil level check
- Perform system filling and purging as earlier instructed.
- Fill helm pump to the brim below filler cap threads. Do not overfill.
- Do not open bleeder until container placed below to avoid fluid spillage.
- Turn steering wheel ½ to let oil out through bleeder.
- Close bleeder and check system as described earlier.

Technical information

Hydraulic fluid:

Craftsman Marine steering systems utilize iso 15-certified hydraulic fluid
- Relative density: 0.865 Gr/cc at 15°c
- Viscosity : 15 cst at 40°c

Iso vg 15 hydraulic fluids are also recommended, as follows:
Mobil dte 11; shell tellus t15; esso nuto h15; q8 haydn 15.

STEERING SYSTEMS

Code	Displacement	No. of pistons	Weight (kg)	Relief valve	Mounting position
BK.020.20020	20 cc	5	4.6	50 Bar	Rear mount
BK.010.20020			4.6		Middle dash mount
BK.020.20028	28 cc	7	5	70 Bar	Rear mount
BK.010.20028			4.8		Middle dash mount
BK.020.20034	34 cc	7	5	70 Bar	Rear mount
BK.010.20034			4.8		Middle dash mount
BK.020.20039	39 cc	7	5	70 Bar	Rear mount
BK.010.20039			4.8		Middle dash mount

Fittings are ¼ " NPT; use sealants Loctite 542 or Loctite 545.

CYLINDERS

Code	Inner diameter (mm)	Stroke (mm)	Rod diameter (mm)	ARM (mm)	A (cm^2)	Output force (kg)	Maximum torque (kg · m)	Application
BL.010.20025	**25**	**150**	**12**	**128.6**	**3.77**	**263.9**	**33.94**	Inboard balanced
BL.010.20032	**32**	**178**	**14**	**154.2**	**6.4998**	**454.986**	**70.16**	
BL.010.20038	**38**	**178**	**16**	**154.2**	**10.05**	**703.5**	**108.48**	
BL.010.20040	**40**	**228**	**18**	**199**	**10.02**	**701.4**	**139.58**	

Use flexible Craftsman Marine hoses or copper tubes to connect steering helm and cylinder and twin steering station installations.

CAUTION:
Listed below by supplier Craftsman Marine are solutions to possible, most frequent faults that may occur with hydraulic steering systems, as follows, to be utilized as a guideline only. Assembly or disassembly of steering system components must only be performed by professional marine technicians. Craftsman Marine accepts no responsibility for damaged property or personal injury in this respect.

FAULT	CAUSE	SOLUTION
Helm blockage in filling phase	Piping/fittings blocked	Check damaged tubing section/blocked fittings and replace
- System difficult to fill - Air bubbling of helm pump after system is filled	Air in system	- Reperform system filling and purging - Install tubing horizontally or with maximum inclination of three cm per mt
	Bleeder fittings leaks	Tight fitting or replace if faulty
	Coiled tubing	Straight tubing
	Helm mounted with filler port in lower position	Remount steering helm in right position
	Piping/fittings blocked	Find blocked fitting and replace
Steering stiff hard to handle even when craft is not moving	Air in system	Reperform system filling and purging
	Utilized oil is wrong	Drain system and refill with recommended oil
- Steering stiff hard to handle even when craft is not moving using unbalanced outboard cylinder - Steering hard to handle when craft is in motion	System not vented at uppermost helm	Check plug type at uppermost helm and replace if wrong
	Bleeder blocked	**Request immediately professional support.** **Don't operate craft.**
	Steering wheel not large enough	Replace with wheel of large diameter
	Wrong trim tab setting	Reset trim tab
	Air in system	Verify oil level and reperform system filling and purging
Cylinder rod not moving	Air in system	Reperform system filling and purging
	- Oil leakage - Helm mounted with filler port in lower position	**Request immediately professional support once leakage discovered.** Remount steering helm in right position
Oil leakage through fittings	Insufficiently serration brace or wrong screwed fittings	Use wrench to tight fittings. Do not exceed 17.6 Nm
	Sealant not enough or unused	Drain and dismantle steering helm. Dismantle fittings and clean up oil residue Treat threaded fittings with sealant liquid and remount Reperform purging
Oil leakage through filler port	Filler plug unproperly tightened	Tight filler plug as recommended
	Vent plug on helm pump other than uppermost	Replace black vent plug with the grey one as recommended
	Worn or damaged OR seal	Replace OR seal
	Excess oil level	See oil level maintenance as earlier instructed

info@craftsmanmarine.com
www.craftsmanmarine.com

ZD-010.028.2.1.03.13

CRAFTED WITH CRAFTSMAN MARINE